9SG5748P5G01 With pulse sensor with PWM control

PWM duty cycle

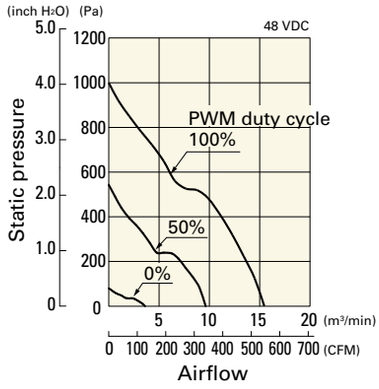

Operating voltage range

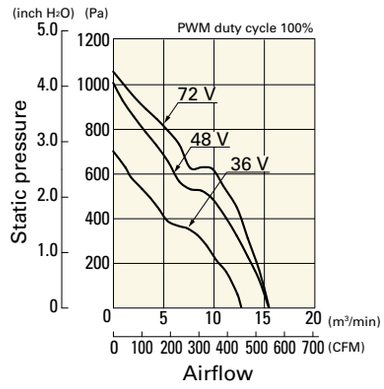

PWM duty - Speed characteristics example

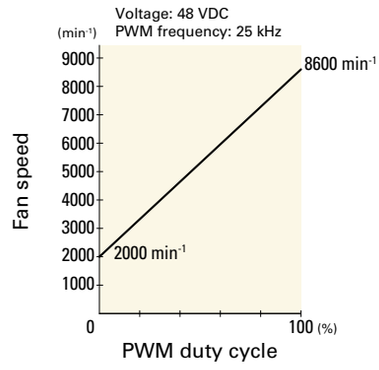

9SG5748P5H01 With pulse sensor with PWM control

PWM duty cycle

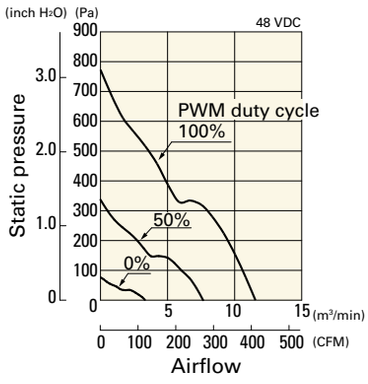

Operating voltage range

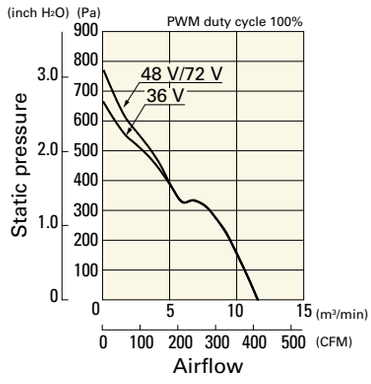

PWM duty - Speed characteristics example

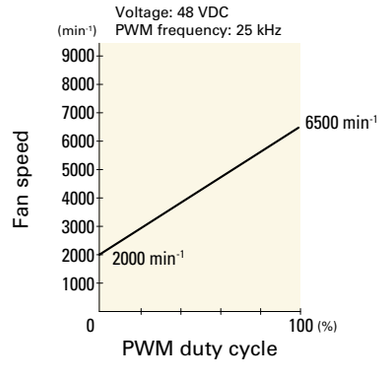

Dimensions (unit: mm)

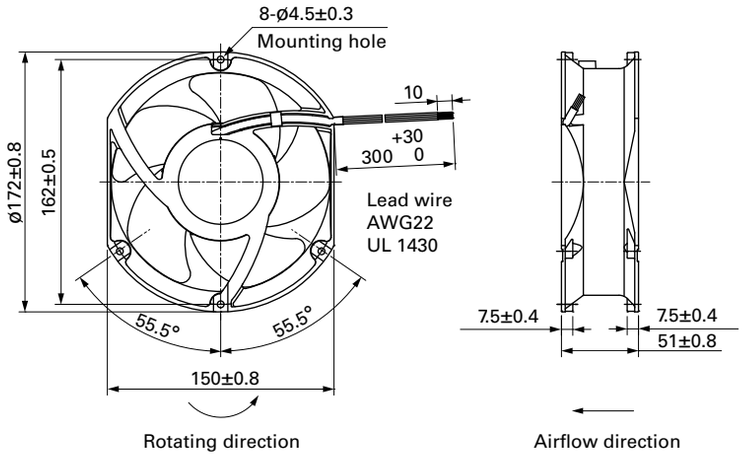

Beijing Hengrui Mechanical and Electrical Equipment Co,Ltd
+86 10-62547612 zhangyu@bjhengrui.cn en.bjhengrui.com

Inlet side, Outlet side

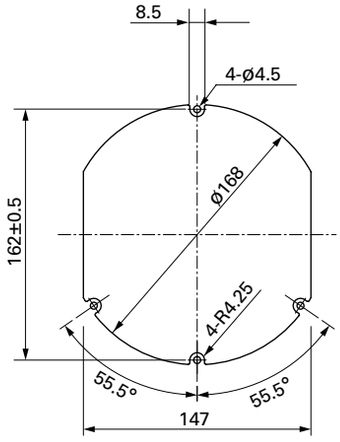

Options

Finger guards page: p. 600

Model no.: 109-1155, 109-1155H

Beijing Hengrui Mechanical and Electrical Equipment Co,Ltd
+86 10-62547612 zhangyu@bjhengrui.cn en.bjhengrui.com

ø172×150×51 mm

San Ace 172 9E type

Sidecut type

General Specifications

- Material ..... Frame: Aluminum, Impeller: Plastic (Flammability: UL 94V-1)
- Expected life ..... See the table below. (L10 life: 90% survival rate for continuous operation in free air at 60˚C, rated voltage) Expected life at 40°C is for reference only.
- Motor protection function ..... Locked rotor burnout protection, Reverse polarity protection For details, please refer to p. 616.
- Dielectric strength ..... 50/60 Hz, 500 VAC, for 1 minute (between lead wire conductors and frame)
- Insulation resistance ..... 10 MΩ min. at 500 VDC (between lead wire conductors and frame)
- Sound pressure level (SPL) ..... A-weighted sound pressure level (SPL) at 1 m away from the air inlet.
- Storage temperature ..... -30 to +70˚C (Non-condensing)
- Lead wire ..... ⊕Red ⊖Black or Blue Sensor Yellow
- Mass ..... 760 g

Specifications

The models listed below **have a pulse sensor.**

Model no.	Rated voltage [V]	Operating voltage range [V]	Rated current [A]	Rated input [W]	Rated speed [min⁻¹]	Max. airflow [m³/min]	Max. airflow [CFM]	Max. static pressure [Pa]	Max. static pressure [inchH₂O]	SPL [dB (A)]	Operating temperature [˚C]	Expected life [h]
109E5712K501	12	10.2 to 13.8	2.9	34.8	4100	8.5	300	243.0	0.976	60	-20 to +60	40000/60˚C (70000/40˚C)
109E5712Y501			2.3	27.6	3800	8	282	210	0.84	60		
109E5712H501			1.2	14.4	3050	6.4	226	137.2	0.551	52	-20 to +70	
109E5712F501			0.68	8.16	2500	5.1	180	95	0.38	47		
109E5712M501			0.48	5.76	2000	4.2	148	67.6	0.271	41		
109E5724C501	24	20.4 to 27.6	2.3	55.2	4800	9.9	350	308.0	1.237	66		
109E5724K501			1.3	31.2	4100	8.5	300	243.0	0.976	60		
109E5724H501			0.58	13.92	3050	6.4	226	137.2	0.551	52		
109E5724F501			0.35	8.4	2500	5.1	180	95	0.38	47		
109E5724M501			0.2	4.8	2000	4.2	148	67.6	0.271	41		
109E5748C501	48	40.8 to 55.2	1.2	57.6	4800	9.9	350	308.0	1.237	66		
109E5748K501			0.7	33.6	4100	8.5	300	243.0	0.976	60	-20 to +60	
109E5748H501			0.28	13.44	3050	6.4	226	137.2	0.551	52	-20 to +70	
109E5748F501			0.19	9.12	2500	5.1	180	95	0.38	47		
109E5748M501			0.11	5.28	2000	4.2	148	67.6	0.271	41		

Note: Sensor and control options are available for selection. Refer to the table on p. 644 to 645.

Airflow - Static Pressure Characteristics

109E5712K501 With pulse sensor

Operating voltage range

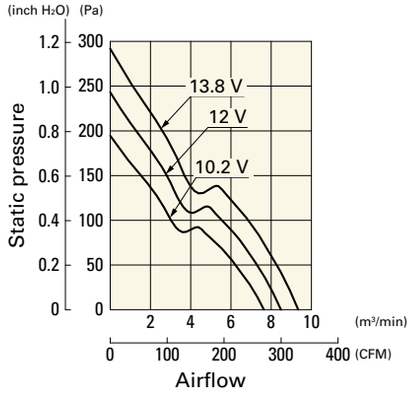

109E5712Y501 With pulse sensor

Operating voltage range

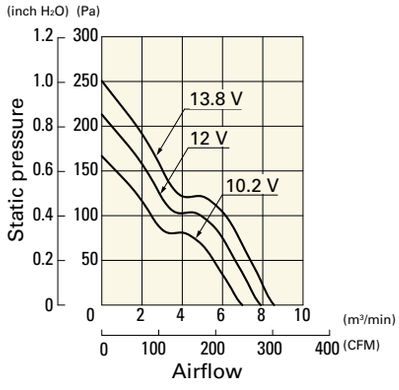

109E5712H501 With pulse sensor

Operating voltage range

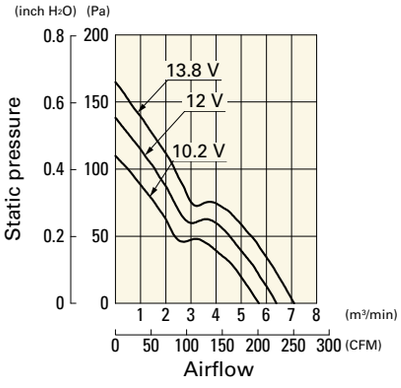

Beijing Hengrui Mechanical and Electrical Equipment Co,Ltd
+86 10-62547612 zhangyu@bjhengrui.cn en.bjhengrui.com

109E5712F501 With pulse sensor

Operating voltage range

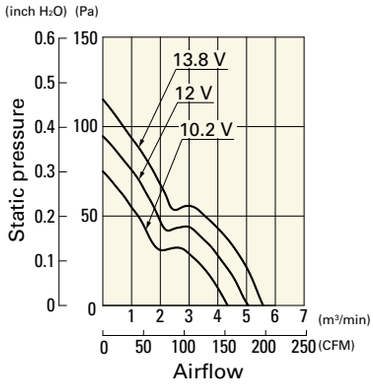

109E5712M501 With pulse sensor

Operating voltage range

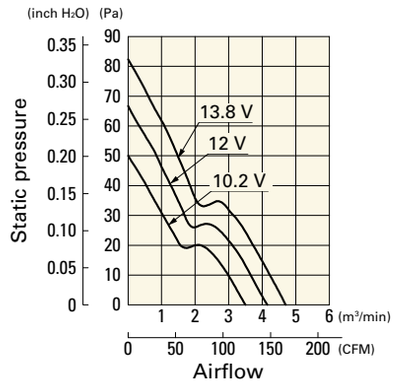

109E5724C501 With pulse sensor

Operating voltage range

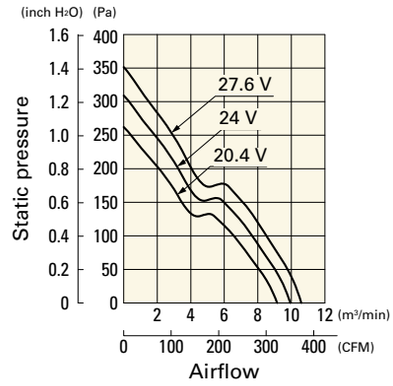

109E5724K501 With pulse sensor

Operating voltage range

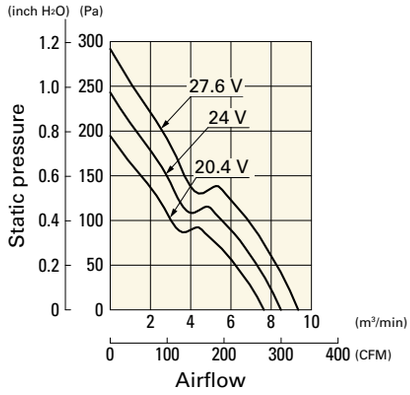

109E5724H501 With pulse sensor

Operating voltage range

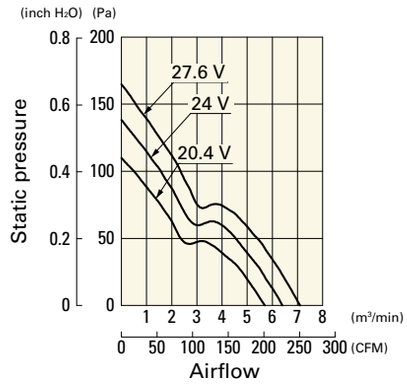

109E5724F501 With pulse sensor

Operating voltage range

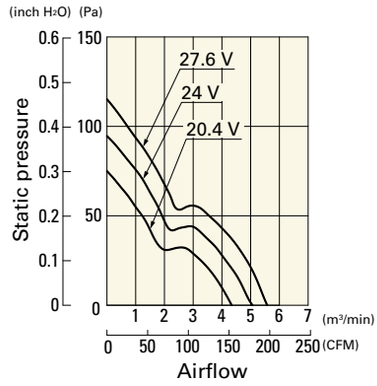

109E5724M501 With pulse sensor

Operating voltage range

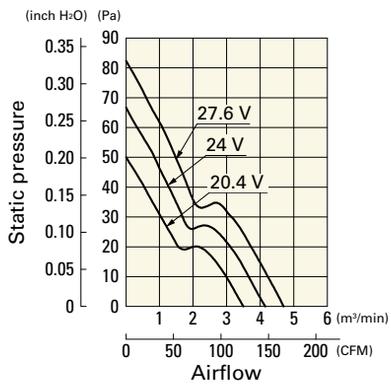

109E5748C501 With pulse sensor

Operating voltage range

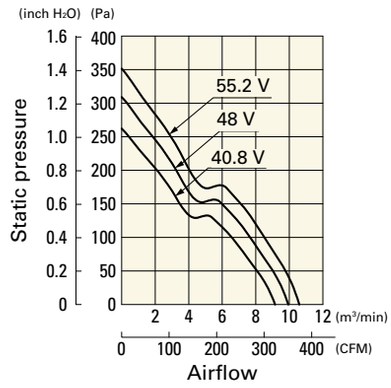

109E5748K501 With pulse sensor

Operating voltage range

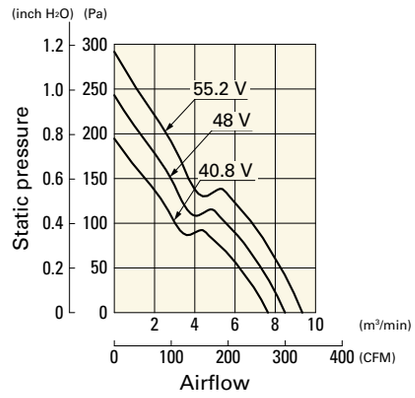

109E5748H501 With pulse sensor

Operating voltage range

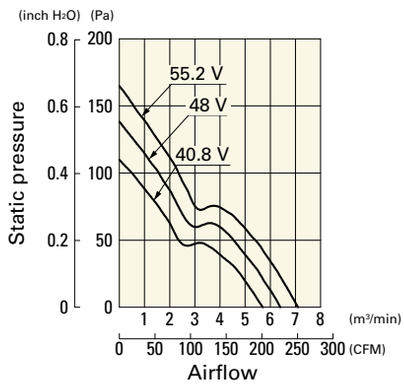

109E5748F501 With pulse sensor

Operating voltage range

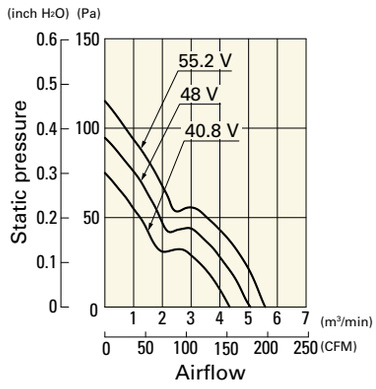

109E5748M501 With pulse sensor

Operating voltage range

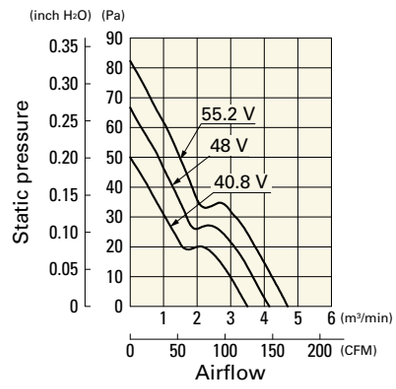

Beijing Hengrui Mechanical and Electrical Equipment Co,Ltd
+86 10-62547612 zhangyu@bjhengrui.cn en.bjhengrui.com

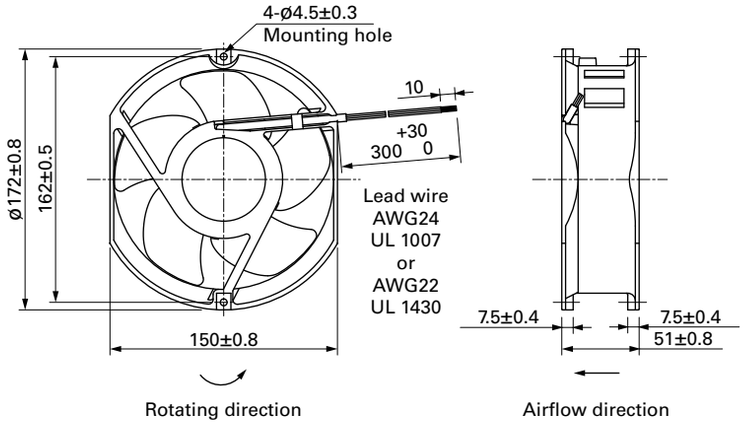

Reference Dimensions of Mounting Holes and Vent Opening (unit: mm)

Inlet side, Outlet side

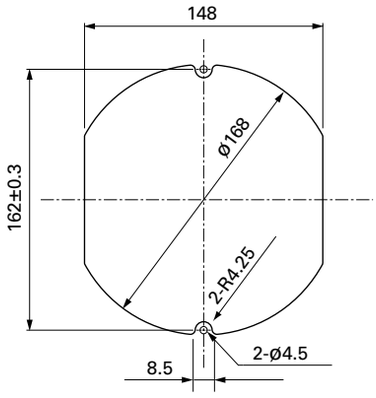

Options

Finger guards page: p. 600

Model no.: 109-319J, 109-319E, 109-319H

Beijing Hengrui Mechanical and Electrical Equipment Co,Ltd
+86 10-62547612 zhangyu@bjhengrui.cn en.bjhengrui.com